EXHIBIT

N

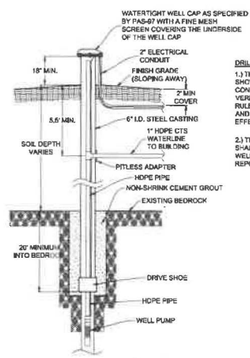

DRILLED WELL NOTES

1.) THE DRILLED WELLS SHALL BE LOCATED AS SHOWN ON THE SITE PLAN AND BE CONSTRUCTED IN ACCORDANCE STATE OF VERMONT ENVIRONMENTAL PROTECTION RULES, CHAPTER 1, WASTEWATER SYSTEM AND POTABLE WATER SUPPLY RULES, EFFECTIVE APRIL, 12th, 2019.

2.) THE WATER SUPPLY LINE AND WELL PUMP SHALL BE SIZED IN ACCORDANCE WITH THE WELL YIELD DATA AND WELL DRILLERS REPORT.

DRILLED BEDROCK WELL DETAIL

NTS

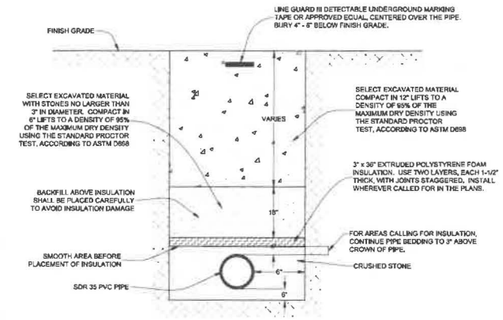

TYPICAL TRENCH DETAIL, SDR 35 PVC SANITARY SEWER

NTS

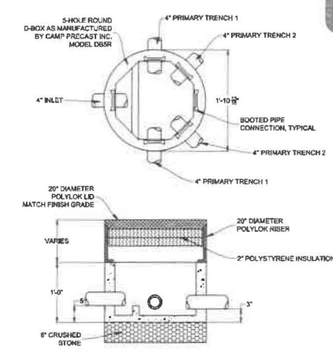

5-HOLE DISTRIBUTION BOX DETAIL

NTS

LOT 5A WASTEWATER DISPOSAL DESIGN

DESIGN FLOW
FOUR BEDROOM DWELLING = (70 GPD X 2 PEOPLE PER BEDROOM X 3 BEDROOMS) + 70 GPD/PER 4TH BEDROOM = 490 GPD

LEACHFIELD SIZING
TRENCHES ARE TO BE USED, THEREFORE THE BOTTOM AREA OF THE TRENCHES WERE CALCULATED USING SS 1-817(a) MINIMUM REQUIRED SQUARE FOOTAGE

DF = AR = TA
DF = DESIGN FLOW IN GPD
AR = APPLICATION RATE IN GPD PER S.F. IDENTIFIED IN SS 1-911
TA = MINIMUM REQUIRED BOTTOM TRENCH AREA IN S.F.

DF = 490 GPD
AR = USING TABLE 9-3, FINE SAND WITH GRANULAR STRUCTURE FOR IN-GROUND TRENCH = 1.00 GPD PER S.F.
TA = 490 GPD ÷ 1.00 GPD PER S.F. = 490 S.F.

REPLACEMENT AREA TO BE INTERTWINGERED WITH THE PRIMARY AREA IDENTIFIED IN SS 1-817(c)(1)

LEACHFIELD DIMENSIONS
490 S.F. ÷ 4' WIDE TRENCHES = 122.5 L.F. OF 4' WIDE TRENCH
122.5 L.F. ÷ 2 TRENCHES = 61.25' LONG

LEACHFIELD SHALL BE: 2 TRENCHES X 4' WIDE X 61.5 LONG (TRENCHES ARE LONGER TO ACCOMMODATE CENTER LOADING)

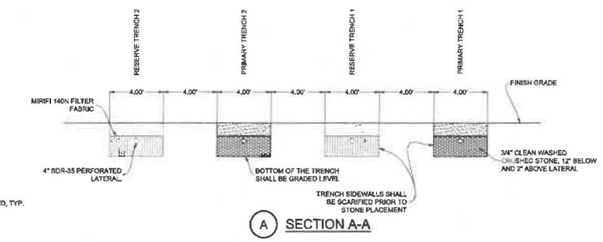

A SECTION A-A

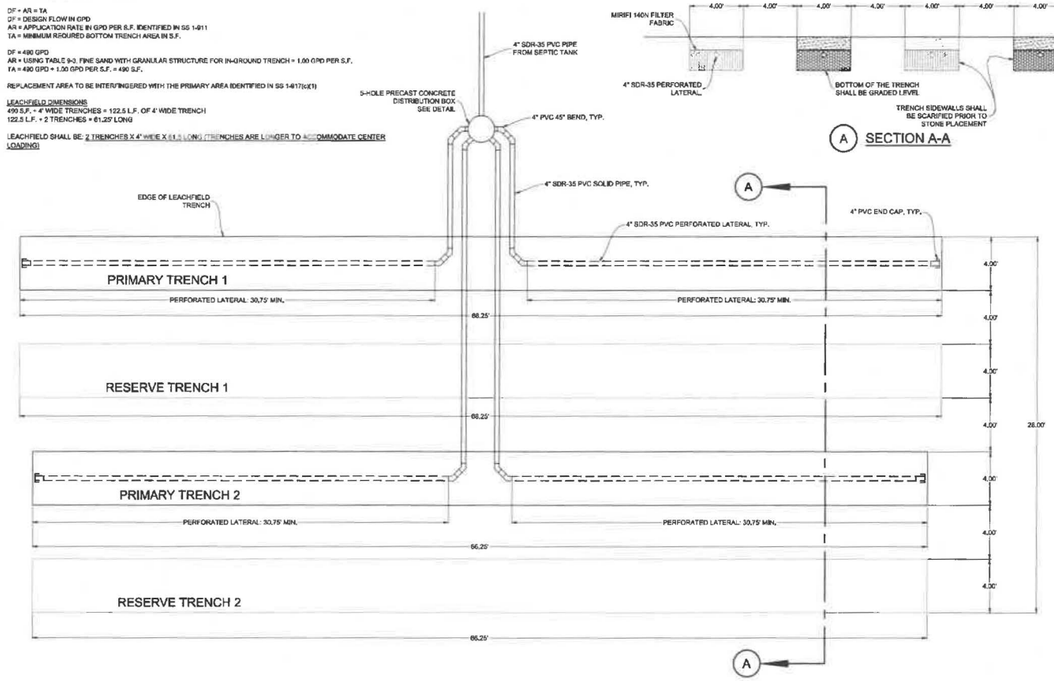

LOT 5A PRIMARY AND RESERVE WASTEWATER DISPOSAL FIELD DETAIL

NTS

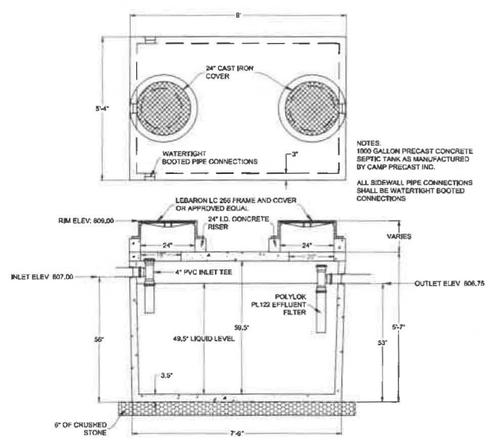

TYPICAL 1000 GALLON PRECAST CONCRETE SEPTIC TANK DETAIL

NTS

DATE	REVISION	BY

CLIENT
MARTY BASLOW
65 COLONEL PAGE ROAD
ESSEX JUNCTION, VT 05452

PROJECT TITLE
BASLOW SUBDIVISION
FOR PARCEL WC037

DRAWING TITLE
LOT 5A WATER AND WASTEWATER DETAILS

STATE OF VERMONT · RICHARD F. HAMLIN · No. 5260 · REGISTERED PROFESSIONAL ENGINEER

Survey	BFD / RAW	Donald L. Hamlin Consulting Engineers, Inc. 156 Pearl Street Essex Junction, Vermont	Scale NTS
Design	MLD		Job 19-245
Drawn	MLD		File
Checked	RFH		Drawing D-1
Date	06/25/2020		