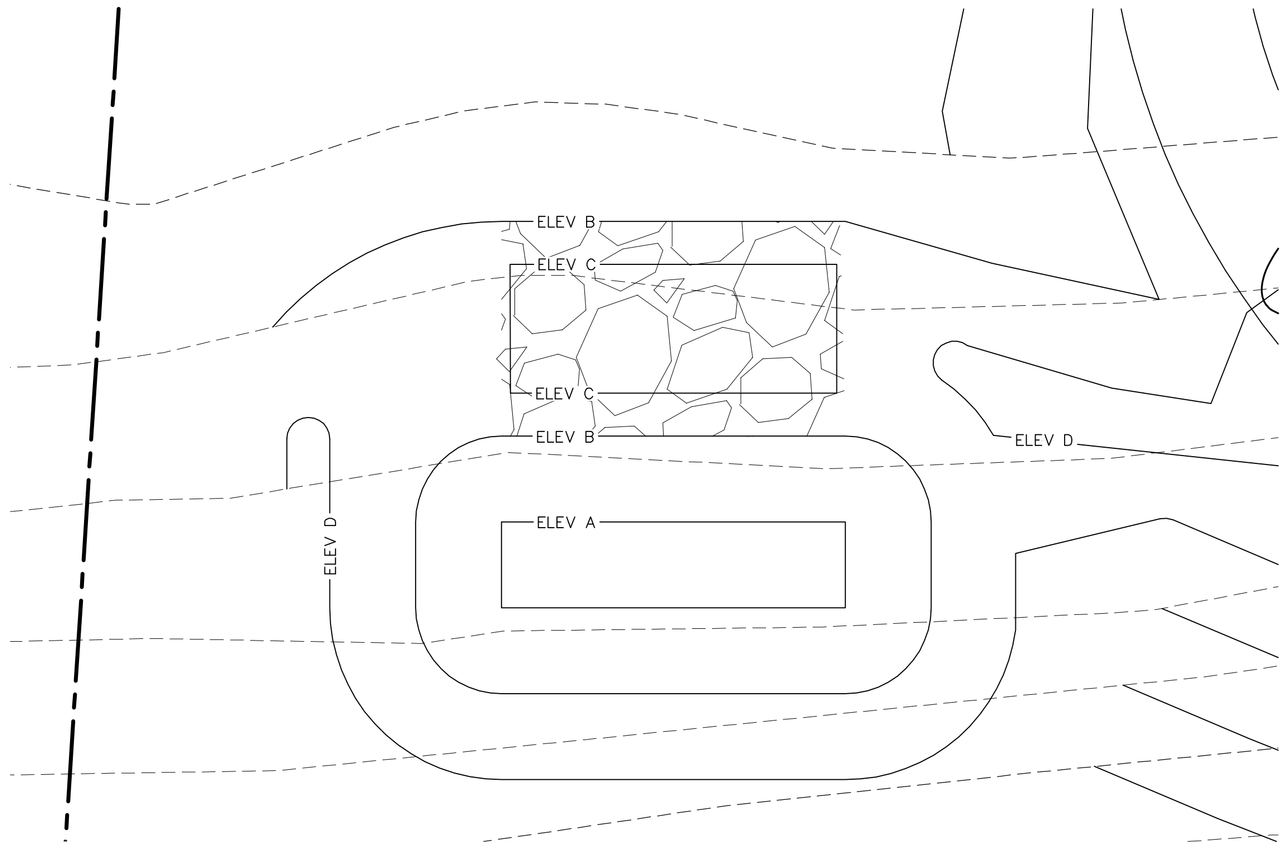

LEVEL SPREADER #1

LEVEL SPREADER TABLE

NO.	ELEV A	ELEV B	ELEV C	ELEV D
1	1170.0	1172.0	1173.0	1174.0
2	1126.0	1128.0	1129.0	1130.0
3	1186.0	1188.0	1189.0	1190.0

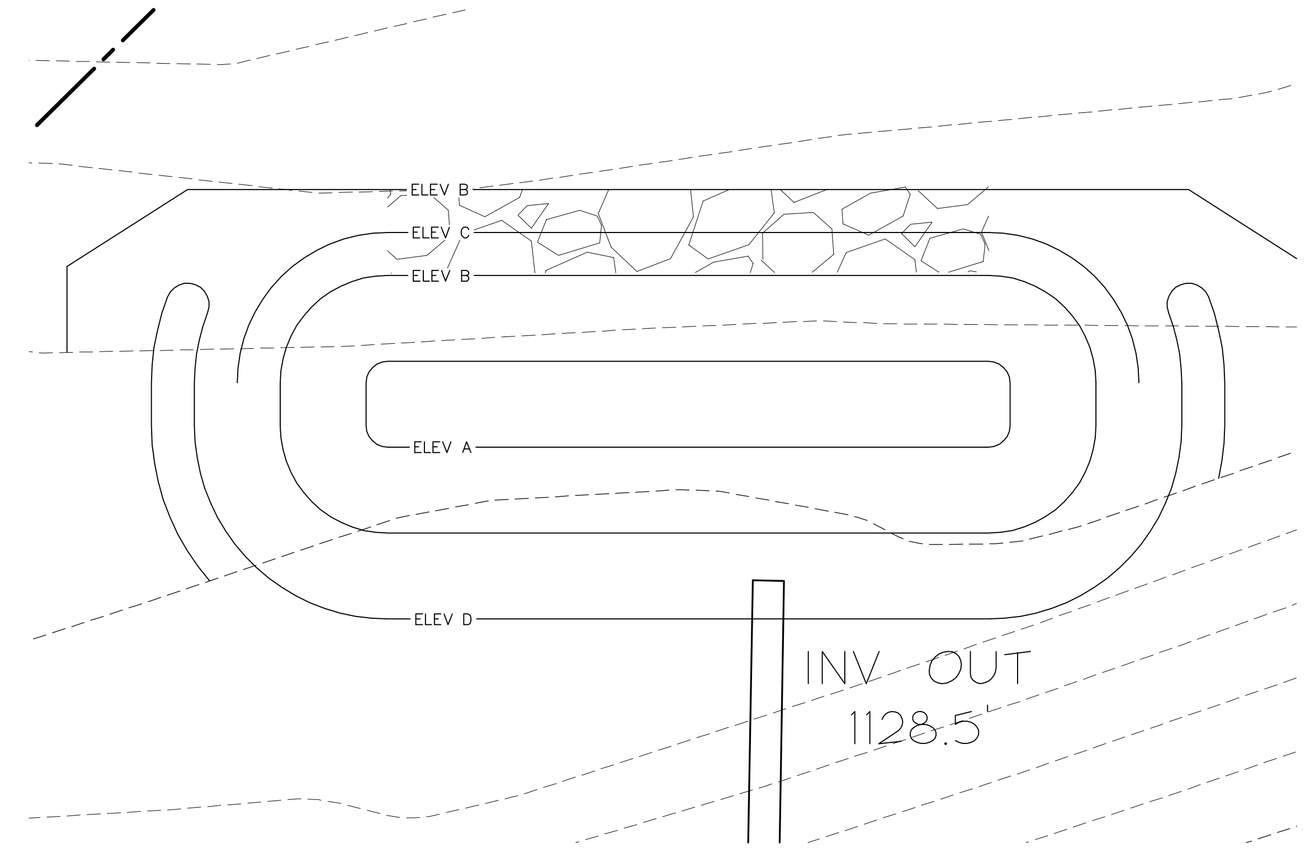

LEVEL SPREADER #2

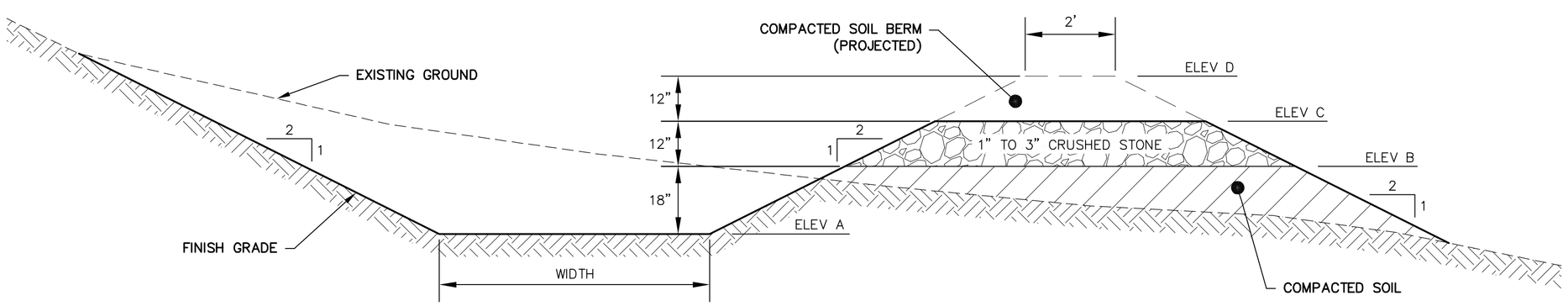

SECTION

LEVEL SPREADER

NTS

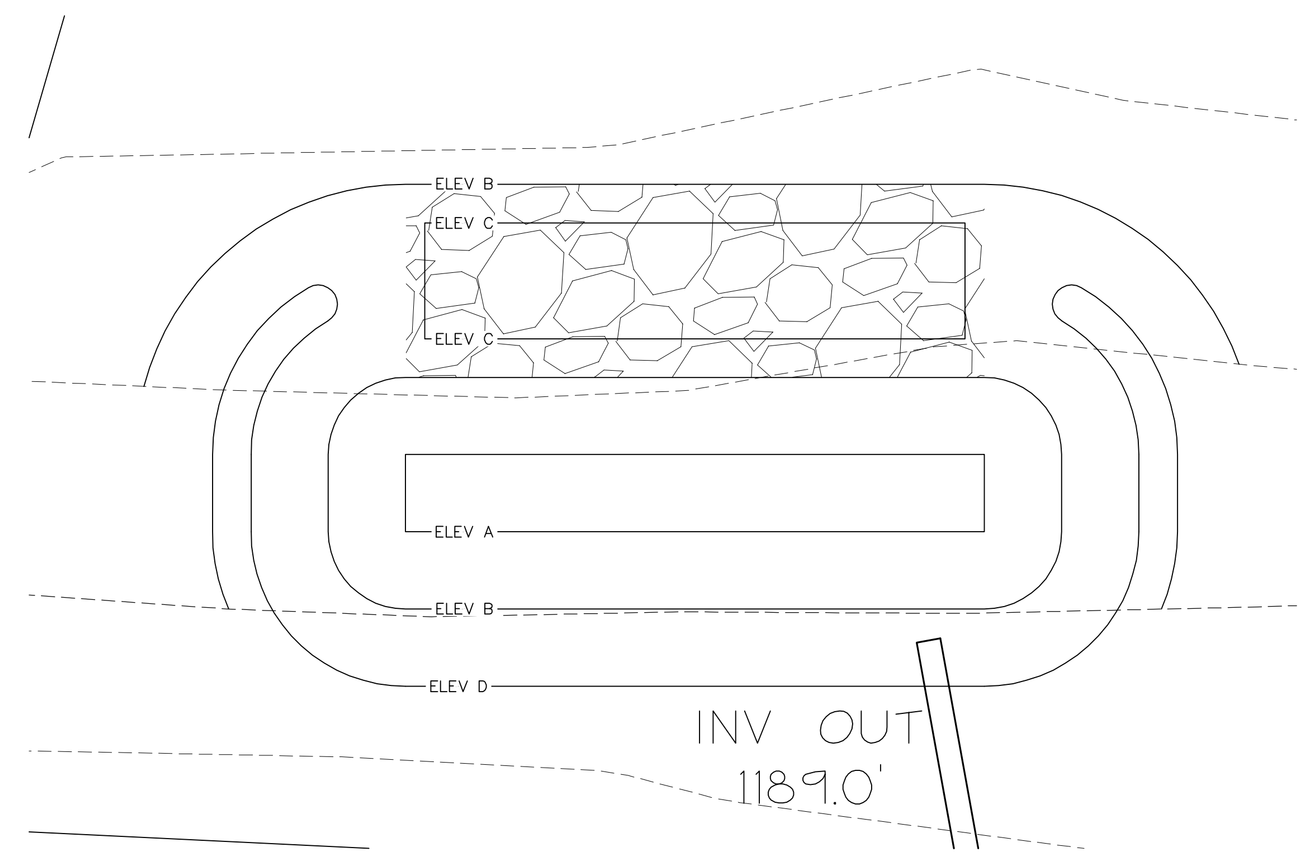

LEVEL SPREADER #3

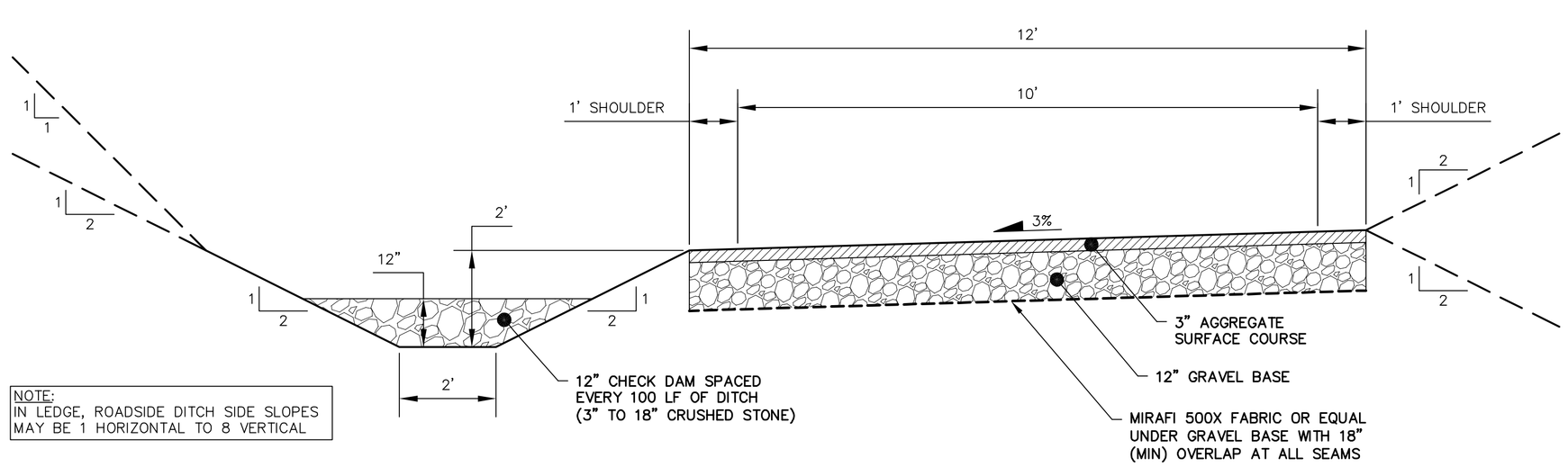

NOTE:
IN LEDGE, ROADSIDE DITCH SIDE SLOPES MAY BE 1 HORIZONTAL TO 8 VERTICAL

DRIVEWAY AND DITCH

NTS

STATE OF VERMONT
PAUL J. O'LEARY, JR.
No. 5477
REGISTERED
PROFESSIONAL ENGINEER

DATE	REVISION		BY
SURVEY OBCA	☐ RECORD DRAWING ☐ FINAL	☐ DISCRETIONARY ■ SKETCH/CONCEPT	DATE 8-27-2018
DESIGN OBCA	O'LEARY-BURKE CIVIL ASSOCIATES, PLC	Underhill — 32 Downes Road — Vermont	JOB# 2018-50
DRAWN OBCA	13 CORPORATE DRIVE ESSEX JCT., VT PHONE: 878-9990 FAX: 878-9989 E-MAIL: obcea@olearyburke.com	Detail Sheet	FILE 2018-50
CHECKED PJO			PLAN SHEET # 4
SCALE N.T.S			